IPC445-i233-NWH

4.0MP Recognitive HD Network Speed Dome Camera

Features

Excellent Image Quality
- 4.0 Megapixel 1/1.8" progressive scan CMOS sensor
- High definition and smooth picture, 2560 x 1440@30fps
- H.265 video codec, saves up to 50% bandwidth and storage
- Ultra low illumination, 0.001lux with color picture
- Support WDR
- WDR / 3D noise reduction / HLC / BLC

Intelligent Functions
- Human face, human silhouette and vehicle capturing
- Built-in picture comparison algorithm, best picture selection

Long Operation Lifespan
- Industrial components, withstands operation temperatures of -40°C ~ 70°C
- IP66, TVS 6000V lightning protection, surge protection and voltage transient protection

Large Scale
- 33x optical zoom
- White light up to 100m

Abundant Functions and Features
- SD card slot, supports Automatic Network Replenishment (ANR)
- Up to 3 video streams
- Bi-directional audio / alarm in and out / video out / RS485
- Built-in O-sensor

Dimensions

Units: mm

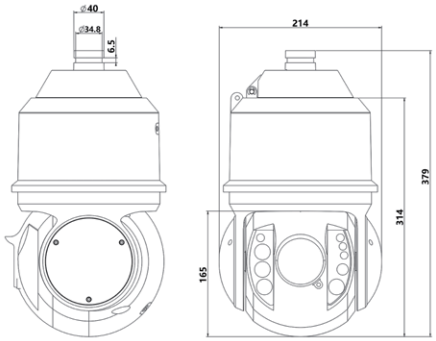

Specifications

	IPC445-i233-NWH
Camera	
Image Sensor	1/1.8" progressive scan CMOS
Pixels	4.0 Megapixel
Min. Illumination	Color: 0.001lux @ (F1.5, AGC ON) B/W: 0.0001lux @ (F1.5, AGC ON)
Shutter Speed	1 ~ 1/30,000s
Day / Night	Auto (ICR) / Color / B/W
Wide Dynamic Range	Digital WDR
S/N Ratio	>=52dB
White Balance	Auto / Manual
Gain Control	Auto / Manual
Backlight Compensation	Off / WDR / BLC / HLC
Lens	
Focal Length	4.5 ~ 148.5mm, 33x optical
Zoom Speed	Approx 3s (Optical)
Angle of View	70°~ 3.8° (Wide~Tele)
Min. Object Distance	300 ~ 1500mm (Wide~Tele)
Max. Aperture Ratio	F1.5 (Wide) / F3.4 (Tele)
Focus Control	Auto / Manual / Semi-Automatic
Night View	
White LED Distance	100m
Pan and Tilt	
Pan / Tilt Range	360° Endless / -20° ~ 90° (Auto Flip)
Pan / Tilt Speed	Pan manual speed: 0.1° ~ 240°/s; Pan preset speed: 300°/s Tilt manual speed: 0.1° ~ 160°/s; Tilt preset speed: 240°/s
Proportional Zoom	Pan / Tilt speed can be adjusted automatically according to zoom multiples
Preset	512
Patrol	8 Patrols scheme, up to 32 presets per patrol
Pattern Scan	4 Scan paths, each path can record 10 minutes of operation path
Power-off Memory	Power-off memory / Power-on recovery
Auto Guard	Path / Preset / Mixed / Pan scan / Tilt scan / Frame scan / Random scan / Panorama scan
PT Limit	Manual / Scan / Pan
3D Positioning	PTZ control with mouse click and drag
Electronic compass	Built-in O-sensor
Video	
Compression	H.265 / H.264 / MJPEG
Image Resolution	Main stream: 2560 x 1440 Secondary stream: D1
Frame Rate	Main stream: 2560 x 1440@30fps, 1080p@30fps Secondary stream: D1@30fps
Bitrate	32kbps ~ 16Mbps
Bitrate Control	VBR / CBR
Multi-stream	Supported
Caption	Date and time / Alarm / Direction / Customized
Privacy Masking	Up to 4 zones
Motion Detection	Up to 4 zones
Video Freeze	Supported
ROI	Supported
Digital Noise Reduction	3D noise reduction
Digital Defog	Supported
Image Flip	Flip / Mirror
Audio	
Compression	G.711a / G.711u / ADPCM / G.722 / G.722.1.c / G.726
Bitrate	32kbps ~ 64kbps
Audio Function	Bi-directional audio / AEC / Mixed audio recording / Dumb / Mute
Network	
Network Protocols	TCP/IP, UDP, HTTP, DHCP, DNS/DDNS, RTP/RTCP, RTSP, PPPoE, FTP, VSIP, UPnP, 802.1x, NAT, QoS, SMTP, IPv4, IPv6 (optional)
User Interface	IPC Control (IE, Firefox, Chrome)
Max. User Access	Max. 20 Users (includes 2 internal)
Application Programming	ONVIF (Profile S, Profile G), GB/T 28181-2011, API, CGI
Automatic Network Replenishment (ANR)	Supported
Recognitive Functions	
Target Detection	Human, Vehicle
Captured Picture	Human face, human silhouette, Vehicle Built-in picture comparison algorithm, best picture selection
Alarm	
Alarm Triggers	Alarm input / Network disconnect / Disk full / Disk error
Intelligent	Motion detection / Tampering / Guard line / Defocus / Scene change / Enter guard area / Exit guard area / Object left / Object removal / Gathering / Audio surge
Alarm Events	Alarm report / Recording / Text overlay / Snapshot / External output / Email notice / Acoustic alarm
Interfaces	
Ethernet	10/100M, RJ45 interface
Audio In / Out	1 x Line in / 1 x Line out
Control	1 x RS485
Alarm In / Out	4 x Input / 2 x Output
Video Out	1 x BNC, 1.0V [p-p] / 75Ω
Memory Slot	SD card slot, supports up to 256GB
Environmental	
Operating Temperature	-40°C ~ 70°C / -40°F ~ 158°F
Operating Humidity	10% ~ 95%
Protection Level	IP66, TVS 6000V lightning protection, surge protection and voltage transient protection
Electrical	
Power	24V AC / 3A (Power adapter included)
Power Consumption	Max. 45W
Mechanical	
Weight	8 kg / 17.6lb (Gross Weight)
Dimensions	Φ214× 379mm / Φ8.43" x 14.92"